版本	变更日期	变更内容	核 准

PIN	NAME
1	LEDK
2	LEDK
3	GND
4	GND
5	FMARK
6	SDA
7	WR
8	SCL
9	CS
10	RESET
11	IOVCC18
12	IOVCC18
13	VCC28
14	VCC28
15	GND
16	GND
17	NC
18	NC
19	NC
20	NC
21	NC
22	NC
23	LEDA
24	LEDA

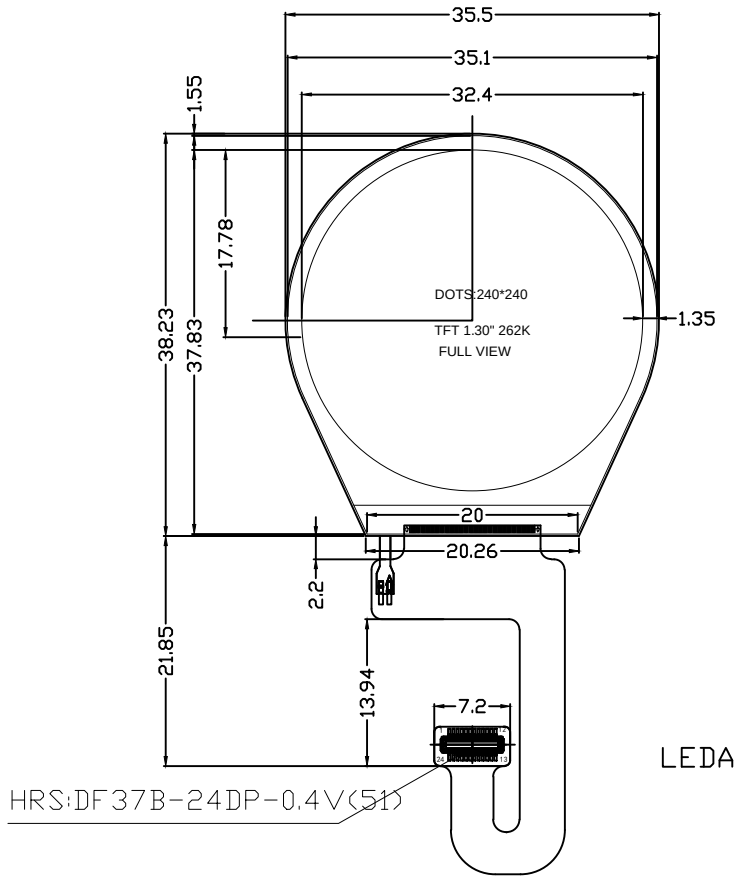

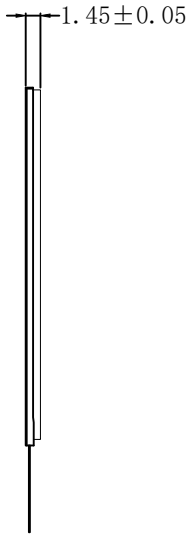

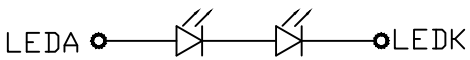

BACKLIGHT LED CIRCUIT
2PCS LED

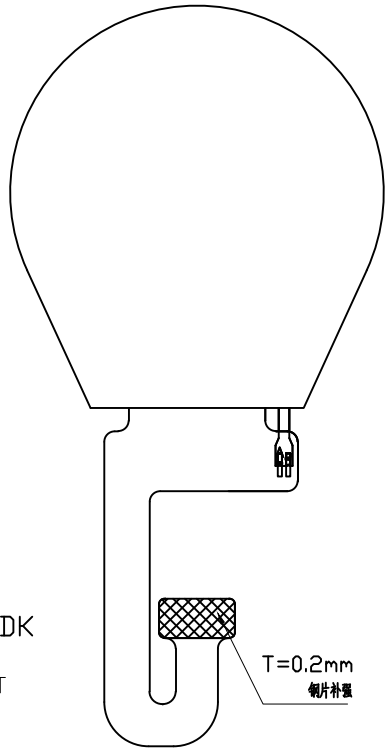

1. DISPLAY TYPE	1.30″ TFT, TRANSMISIVE
2. VIEWING DIRECTION	FULL VIEW
3. DRIVER IC	ST7789V
4. BACKLIGHT	2 Chip-White LED, Serial
5. OPERATIVE VOLTAGE	2.8V
6. OPERATIVE TEMP.	-10° C TO 60° C
7. STORAGE TEMP.	-20° C TO 70° C
8. CONNECTOR	FPC

Approve		
Checked		
Drawn		
Approved		

东莞市一众显示科技有限公司
DONG GUAN TEAM SOURCE DISPLAY TECH. CO, LTD.

视 角 (View):		比例(Proportion):	1 : 1	设 计 (DESIGN)	审 核 (AUDITING)	批 准 (APPROVED)
单 位 (Unit):	M M	页 面 (Page):	1 / 1			
产品型号 (Product Type):		TST013A2402HS				
版 本 (Version):		V1				